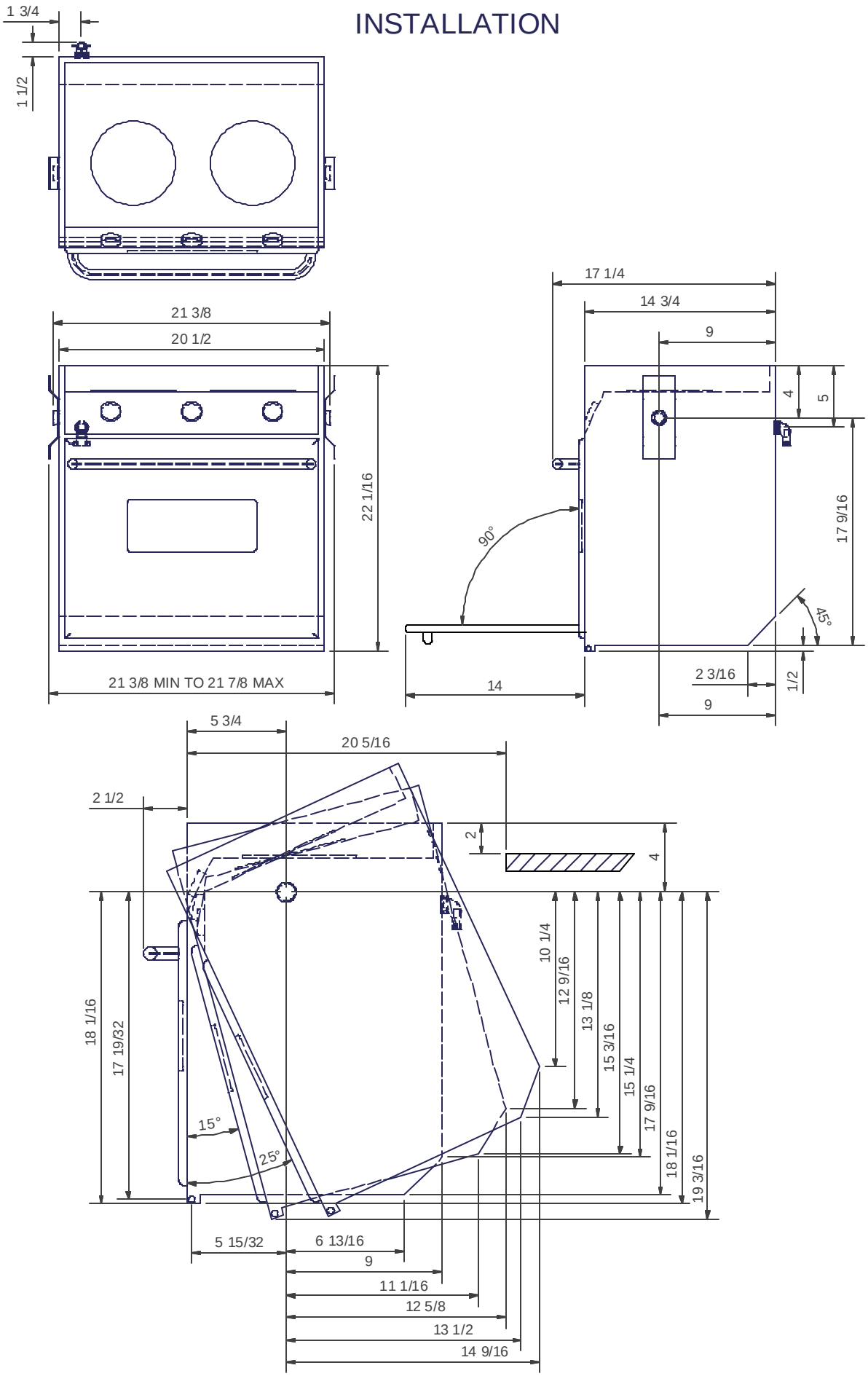# 2 BURNER STOVE WITH OVEN DIMENSIONS AND GIMBAL INSTALLATION