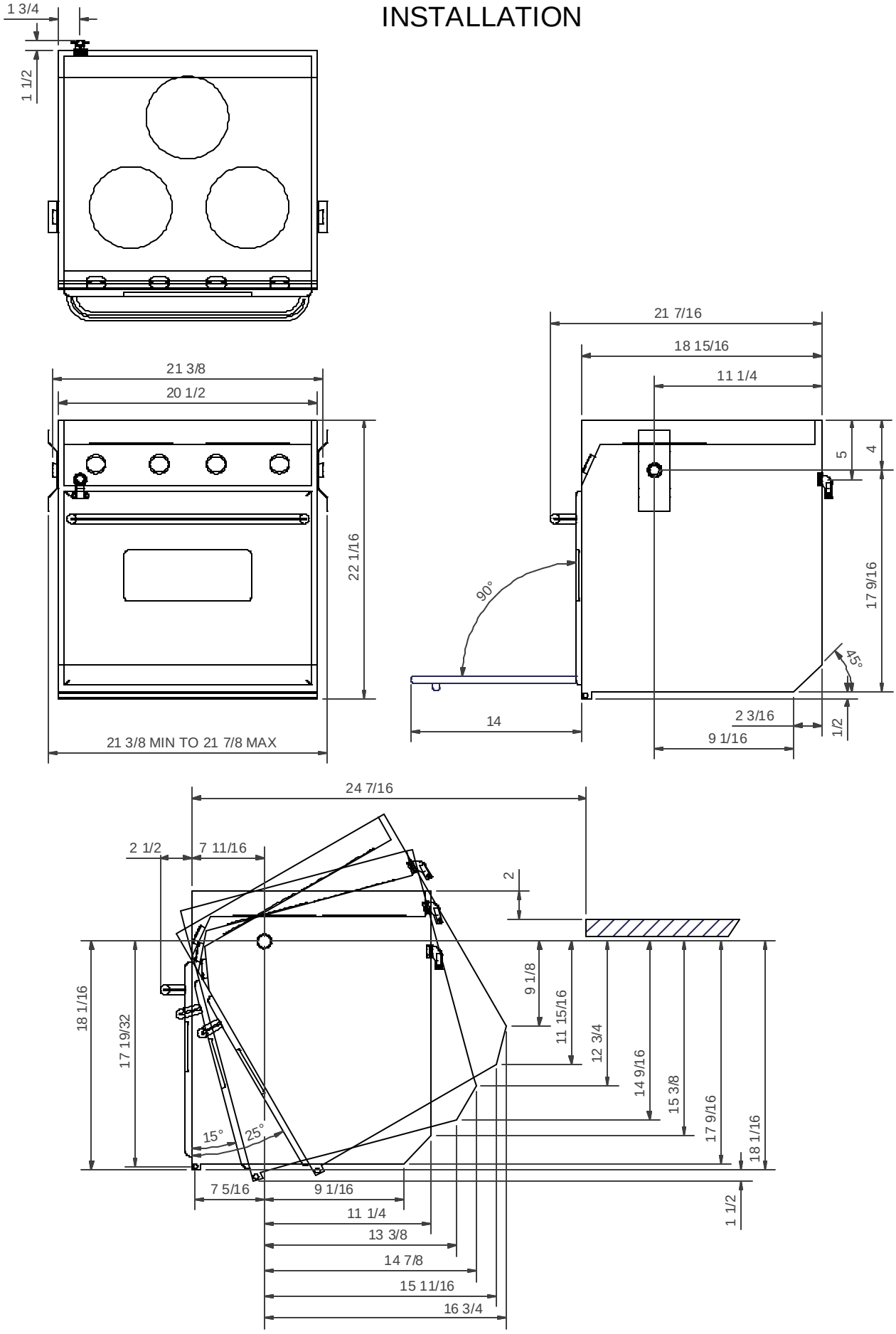3 BURNER STOVE WITH DIMENSIONS AND GIMBAL INSTALLATION